*fridge*

# INSTRUCTION BOOK

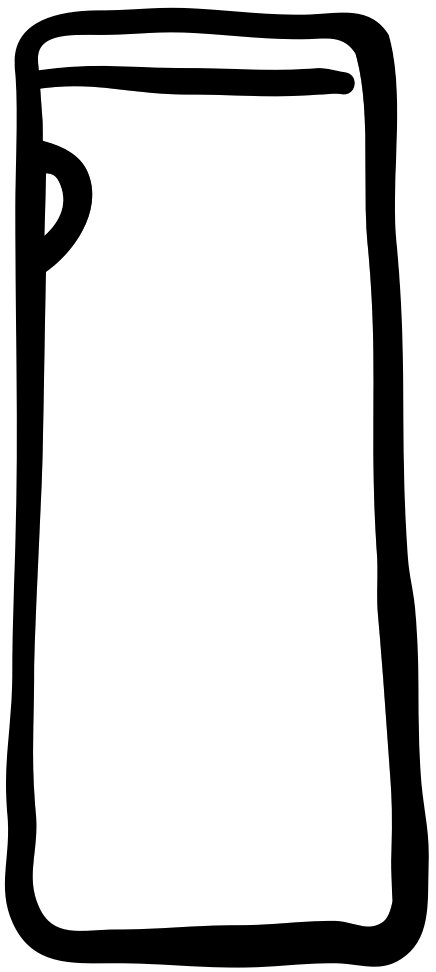

*ER 7620/1 C*

2222 186-26

Electrolux

# ⚠ IMPORTANT SAFETY INFORMATION

**It is most important that this instruction book should be retained with the appliance for future reference. Should the appliance be sold or transferred to another owner, or should you move house and leave the appliance, always ensure that the book is left with the appliance in order that the new owner can get to know the functioning of the appliance and the relevant safety information.**

**This information has been provided in the interest of safety. You MUST read it carefully before installing or using the appliance.**

## Installation

- This appliance is heavy. Care should be taken when moving it.
- It is dangerous to alter the specifications or attempt to modify this product in any way.
- Care must be taken to ensure that the appliance does not stand on the electrical supply cable. **Important:** if the supply cable is damaged, it must be replaced by a special cable available from the manufacturer or its service agent.
- Any electrical work required to install this appliance should be carried out by a qualified electrician or competent person.
- Parts which heat up should not be exposed. Whenever possible, the back of the appliance should be close to a wall but leaving the required distance for ventilation as stated in the installation instructions.
- The appliance should be left for 2 hours after installation before it is turned on, in order to allow the refrigerant to settle.

## Child Safety

- Do not allow children to tamper with the controls or play with the product.
- Keep all packaging well away from children.

## General Safety

- **Take utmost care when handling your appliance so as not to cause any damages to the cooling unit with consequent possible fluid leakages.**
- **The appliance must not be located close to radiators or boilers.**
- **Avoid prolonged exposure of the appliance to direct sunlight.**
- **Do not use other electrical appliances (such as ice cream makers) inside of refrigerating appliances, unless they are approved for this purpose by the manufacturer.**

## During Use

- This appliance is designed for domestic use only, specifically for the storage of edible foodstuffs only.
- Frozen food must NOT be re-frozen once it has thawed out.
- Do not place carbonated or fizzy drinks in the freezer.
- Do not remove items from the freezer if your hands are damp/wet, as this could cause skin abrasions or frost/freezer burns.
- Ice lollies can cause ‘frost/freezer burns’ if consumed straight from the freezer.
- Manufacturers’ storage recommendations should be strictly adhered to. Refer to relevant instructions.
- The cooling plate or refrigerated freezer shelves in this appliance contain channels through which the refrigerant passes. If these are punctured this will cause substantial damage to the appliance and result in food loss. DO NOT USE SHARP INSTRUMENTS to scrape off frost or ice. Under NO circumstances should solid ice be forced off the lining or shelves. Solid ice should be allowed to thaw, when defrosting the appliance. See Defrost Instructions.

## Maintenance and Cleaning

- Switch off and unplug the appliance before carrying out any cleaning or maintenance work.

## Servicing

- This product should be serviced by an authorised engineer and only genuine spare parts should be used.
- Under no circumstances should you attempt to repair the machine yourself. Repairs carried out by inexperienced persons may cause injury or serious malfunctioning. Refer to your local Electrolux Service Force Centre and always insist on genuine spare parts.

## At the end of the Appliance Life

- When disposing of your appliance, use an authorised disposal site.
- Remove the plug and ensure that any locks or catches are removed, to prevent young children being trapped inside.

# CONTENTS

## Instructions for the User


**Important Safety Information** 2

**Operation** 4

Before use 4

Setting the temperature 4

Fresh food refrigeration 4

Normal operating sounds 4

Positioning the inner shelves 5

Positioning the door shelves 5

**Health and Safety Guidelines** 5

**Maintenance and Cleaning** 6

Internal cleaning 6

External cleaning 6

When the appliance is not in use 6

Changing the light bulb 6

Defrosting 6

**Something not working** 7

**Service and Spare Parts** 8

**Customer Care** 8

**Guarantee Conditions** 9


## Instructions for the Installer


**Technical Specification** 10

**Installation** 11

Positioning 11

Rear Spacers 11

**Electrical Connection** 12

**Door Reversal** 13

# OPERATION

## Before using

Remove all securing tapes. Wash inside the appliance with lukewarm water and bicarbonate of soda (5 ml to 0.5 litre of water).

**Do not use soap or detergent as the smell may linger. Dry thoroughly.**

## Setting the temperature

The temperature inside the refrigerator is regulated by a thermostat with 6 temperature positions and an «OFF» (O) position.

Position 1 = minimum coldness

Position 6 = maximum coldness

Turn the thermostat dial to the required position.

**The intermediate position is usually the most suitable (3-4).**

The thermostat setting can vary as the temperature inside the refrigeration compartment depends on the following factors:

– room temperature

– how often the door is opened

– how much food is stored

– position of the appliance

⚠ **Important**

During prolonged periods of abnormally hot weather, if the thermostat is set on too high a number, the cooling system may operate continuously and the fridge cooling plate may not defrost. Turning the knob to a lower number will cause the automatic defrosting to resume.

## Fresh food refrigeration

To obtain the best performance, do not store warm food or evaporating liquids in the refrigerator; do cover or wrap the food, particularly if it has a strong flavour.

Do not cover the shelves with any protective material, such as paper, cardboard or plastic, which may obstruct the air circulation through them.

To help you use your refrigerator correctly, here are some more useful hints:

Raw meat (beef, pork, lamb & wild fowl): wrap in polythene bags and place on top of the salad crispers.

**Meat can only be stored safely in this way for one or two days at the most.**

Fruit & vegetables: these should be thoroughly cleaned and placed in the bottom salad crispers.

Butter & cheese: these should be placed in special airtight containers or wrapped in aluminium foil or polythene bags to exclude as much air as possible.

Milk bottles: these should have a cap and should be stored in the bottle rack on the door.

## Normal Operating Sounds

- You may hear faint gurgling or bubbling sounds when the refrigerant is pumped through the coils or tubing at the rear, to the cooling plate/evaporator or to the fixed freezer shelves.
- When the compressor is on, the refrigerant is being pumped round, and you will hear a whirring sound or pulsating noise from the compressor.
- A thermostat controls the compressor, and you will hear a faint ’click’ when the thermostat cuts in and out.

## Positioning the inner shelves

The walls of the refrigerator have runners so that shelves can be positioned as desired.

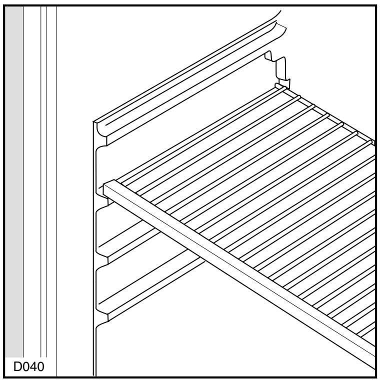


## Positioning the door shelves

To permit storage of food packages of various sizes, the door shelves can be adjusted in height.

To do this proceed as shown in the diagram.

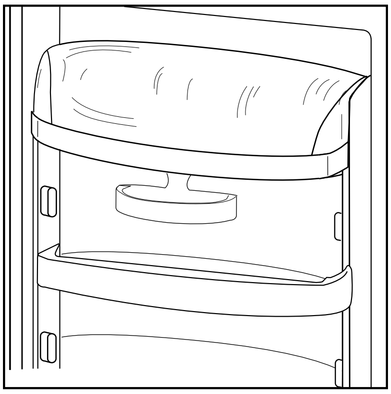

# HEALTH AND SAFETY GUIDELINES

**Because of consumer demand, preservatives have been removed from many pre-prepared foods. This together with the changes in shopping habits to a once-a-week shop, mean that safe handling and storage of food is even more important than ever.**

**The following tips should help you to ensure that the food in your home is in as perfect condition as possible.**

- Keep the time between buying chilled food and placing it in your fridge as short as possible. Tests showed that the temperature of 1 litre of orange juice rose to 22°C in an hour between the supermarket and home. It then took 11 hours to get down to 7°C in the refrigerator.
- Keep the refrigerator door closed as much as possible.
- Do not push food together too much, try to allow air to circulate around each item.
- Cool cooked food as quickly as possible but do NOT place in the refrigerator until cool. (Leave food in a place as cool as possible in order that it can then be placed in the refrigerator as soon as possible).
- Do NOT mix raw and cooked meat, they must be in separate containers. Take care not to let the meat juices drip onto other food. If the meat does drip, remove everything and clean thoroughly.
- Do not store food uncovered.
- Remove suspect food from your refrigerator and clean (refer to “Maintenance and Cleaning).
- Never allow spillages to dry and harden.
- Store eggs in the egg rack provided in the refrigerator door. Discard any broken or chipped eggs.
- Regularly check the refrigerator door seal to ensure that it is clean and free from debris.
- Always wash your hands with soapy water and dry them with a clean towel before handling food.
- Keep work surfaces clean and avoid cross contamination by not using the same work surface or knife, without washing them thoroughly in between.

# MAINTENANCE AND CLEANING

Before any maintenance or cleaning work is carried out, DISCONNECT the appliance from the ELECTRICITY supply.

## Internal cleaning

Clean the inside and accessories with warm water and bicarbonate of soda (5ml to 0.5 litre of water). Rinse and dry thoroughly.

⚠ **NEVER USE DETERGENTS, ABRASIVE POWDERS, HIGHLY PERFUMED CLEANING PRODUCTS OR WAX POLISHES, TO CLEAN THE INTERIOR AS THESE WILL DAMAGE THE SURFACE AND LEAVE A STRONG ODOUR.**

Clean the drain hole of the water trough at regular intervals and make sure that the drain hole is never obstructed, so that the defrost water may flow freely.

## External cleaning

**Many proprietary kitchen surface cleaners contain chemicals that can attack/damage the plastics used in this appliance. For this reason it is recommended that the outer casing of this appliance is only cleaned with warm water with a little washing-up liquid added.**

An accumulation of dust will affect the performance of the appliance and cause excessive electricity consumption.

You MUST ensure that the appliance is switched OFF.

Once or twice a year dust the condenser (black grill) and the compressor at the back of the appliance, with a brush or vacuum cleaner, see diagram.

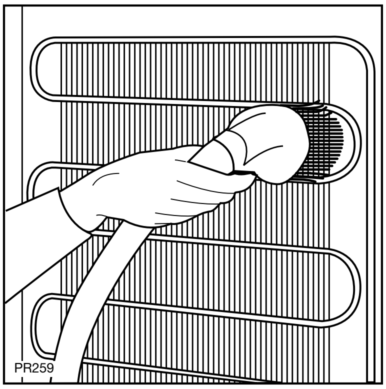


## When the appliance is not in use

When the appliance is not in use for long periods, disconnect from the electricity supply, empty all foods and clean the appliance, leaving the doors ajar to prevent unpleasant smells.

## Changing the light bulb

Should the interior light fail to work, first switch off the appliance and disconnect from the electricity supply, then replace the bulb as follows;

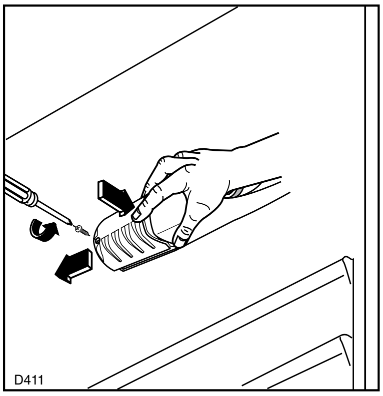


Unscrew the light cover and then pull it outward by pressing as shown in the figure. Unscrew the bulb and replace it with a new 15 watt bulb (available from your nearest Electrolux Service Force Centre).

Replace the light cover by sliding it into its original position and replacing the screw.

## Defrosting

The refrigerator automatically defrosts every time the compressor stops. The water is discharged, via the pipe, into a tray located at the back of the appliance above the compressor, where it evaporates.

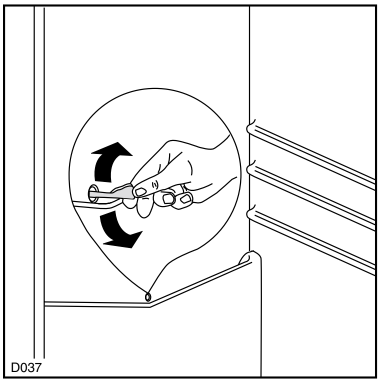


⚠ **Important**

To avoid defrost water overflowing into the fridge, periodically clean the water discharge hole in the centre of the V shaped drip collector at the back of the refrigerator compartment behind the fruit and vegetable drawer. Use the defrost cleaner provided which you will find already inserted into the discharge hole.

Remember to wash the defrost cleaner in hot soapy water at regular intervals. Dry throughly before replacing.

# SOMETHING NOT WORKING

**Important:** If you call out an engineer to a fault listed below, or to repair a fault caused by incorrect use or installation a charge will be made, even if the appliance is under guarantee.

**Before** contacting your local Electrolux Service Force Centre, check the following points:

| Symptom | Solution |
|---|---|
| No power to the appliance | Check there is power at the socket. |
| | Check there is not a power cut by checking the household lights. |
| | Check the fuse has not blown. |
| The light does not come on | Ensure that the bulb is correctly fitted. |
| | Replace the bulb if it has blown. |
| | Check the door light switch is not jammed. |
| The temperature in the fridge | Check the thermostat control knob in the fridge is turned to the correct setting relative to ambient conditions. |
| | Check the ambient temperature is within the appliance's operating limits, please refer to the installation section in this instruction book. Relocate the appliance if necessary. |
| The compressor runs continously | Adjust the thermostat control knob to give correct temperature control. See "Setting the temperature". |
| | Check that the door is closed. |
| | Large quantities of food have recently been placed in the cabinet and/or door is frequently opened. |
| | Check that air ventilation is not obstructed. |
| Noise | Refer to normal operating sounds. |
| Water under the salad crispers | Check the drain hole is not blocked. (see Maintenance and Cleaning). |

If, after the above checks, there is still a fault, call your local Service Force Centre.

In guarantee customers should ensure that the above checks have been made as the engineer will make a charge if the fault is not a mechanical or electrical breakdown.

Please note that proof of purchase is required for any in-guarantee service calls.

# SERVICE AND SPARE PARTS

In the event of your appliance requiring service, or if you wish to purchase spare parts, please contact your local Electrolux Service Force Centre by telephoning:-

**0870 5 929929**

Your telephone call will be automatically routed to the Service Force Centre covering your post code area.

For the address of your local Service Force Centre and further information about Service Force, please visit the website at www.serviceforce.co.uk

For Customer Service in Ireland please

contact us at the address below:

Electrolux Group (Irl) Ltd

Long Mile Road

Dublin 12

Republic of Ireland

Telephone : +353 (0)1 4090753

Email: service.eid@electrolux.ie

Before calling out an engineer, please ensure you have read the details under the heading 'Something Not Working.'

When you contact the Service Force Centre you will need to give the following details:

1. Your name, address and post code
2. Your telephone number
3. Clear and concise details of the fault
4. The model and serial number of the appliance (found on the rating plate)
5. The purchase date

**Please note that a valid purchase receipt or guarantee documentation is required for in-guarantee service calls.**

# CUSTOMER CARE DEPARTMENT

For general enquiries concerning your Electrolux appliance or for further information on Electrolux products, please contact our Customer Care Department by letter or telephone at the address below or visit our website at www.electrolux.co.uk

Customer Care Department

Electrolux

55-77 High Street

Slough

Berkshire

SL1 1DZ

08705 950 950 *

* calls to this number may be recorded for training purposes.

# GUARANTEE CONDITIONS

## Standard guarantee conditions

We, Electrolux, undertake that if within 12 months of the date of the purchase this Electrolux appliance or any part thereof is proved to be defective by reason only of faulty workmanship or materials, we will, at our option repair or replace the same FREE OF CHARGE for labour, materials or carriage on condition that:

The appliance has been correctly installed and used only on the electricity supply stated on the rating plate.

The appliance has been used for normal domestic purposes only, and in accordance with the manufacturer's instructions.

The appliance has not been serviced, maintained, repaired, taken apart or tampered with by any person not authorised by us.

All service work under this guarantee must be undertaken by an Electrolux Service Force Centre. Any appliance or defective part replaced shall become the Company's property.

This guarantee is in addition to your statutory and other legal rights.

Home visits are made between **8.30am and 5.30pm** Monday to Friday. Visits may be available outside these hours in which case a **premium** will be charged.

## Exclusions

**This guarantee does not cover:**

Damage or calls resulting from transportation, improper use or neglect, the replacement of any light bulbs or removable parts of glass or plastic.

Costs incurred for calls to put right an appliance which is improperly installed or calls to appliances outside the European Community (EC) or European Free Trade Area.

Appliances found to be in use within a commercial environment, plus those which are subject to rental agreements.

Products of Electrolux manufacture which are not marketed by Electrolux.

## European Guarantee

If you should move to another country within Europe then your guarantee moves with you to your new home subject to the following qualifications:

The guarantee starts from the date you first purchased your product.

The guarantee is for the same period and to the same extent for labour and parts as exists in the new country of use for this brand or range of products.

This guarantee relates to you and cannot be transferred to another user.

Your new home is within the European Community (EC) or European Free Trade Area.

The product is installed and used in accordance with our instructions and is only used domestically, i.e. a normal household.

The product is installed taking into account regulations in your new country.

Before you move please contact your nearest Customer Care centre, listed below, to give them details of your new home. They will then ensure that the local Service Organisation is aware of your move and able to look after you and your appliances.

| | | |
|---|---|---|
| France | Senlis | +33 (0)3 44 62 20 13 |
| Germany | Nürnberg | +49 (0)800 234 7378 |
| Italy | Pordenone | +39 (0)800117511 |
| Sweden | Stockholm | +46 (0)20 78 77 50 |
| UK | Slough | +44 (0)1753 219898 |
| Ireland | Dublin | +353 (0)1 4090753 |

# TECHNICAL SPECIFICATIONS

| | | | |
|---|---|---|---|
| DIMENSIONS | | | |
| | Height | 140 | cm |
| | Width | 55 | cm |
| | Depth | 60 | cm |
| POWER SUPPLY VOLTAGE AND FREQUENCY | | 220-240 V / 50 Hz | |
| TOTAL POWER ABSORBED | | 90 W | |
| AVERAGE DAILY UNITS ELECTRICITY * | | 0.62 kWh | |
| GROSS CAPACITY | | | |
| | Fridge | 263 l | |
| NET CAPACITY | | | |
| | Fridge | 260 l | |

* This figure is based on standard test results in accordance with European Standard EN 153.
Actual consumption will depend on how the appliance is used and where it is located.

# INSTALLATION

## ⚠ Warning

IF YOU ARE DISCARDING AN OLD APPLIANCE THAT HAS A LOCK OR CATCH ON THE DOOR, YOU MUST ENSURE THAT IT IS MADE UNUSABLE TO PREVENT YOUNG CHILDREN BEING TRAPPED INSIDE.

Depending upon the position which you choose for your appliance, you may wish to reverse the way in which the door opens. To do this, refer to instructions on "Door reversal directions".

## Positioning

This appliance should only be installed at a location where the ambient temperature corresponds to the climate classification indicated on the rating plate, which is located at the left on the inside of the appliance.

The following table shows which ambient temperature is correct for each climate classification:

| | | | |
|---|---|---|---|
| SN | +10°C | to | + 32°C |
| N | +16°C | to | + 32°C |
| ST | +18°C | to | + 38°C |
| T | +18°C | to | + 43°C |

It should be located in a dry atmosphere, out of direct sunlight and away from extreme temperature e.g. not next to a boiler or radiator, or in a very cold room e.g. an outhouse, where the temperatures may fall below 10°C (50°F). If these temperatures are exceeded i.e. colder or warmer, then the appliance may not operate correctly.

You should also ensure that air can circulate freely around the back and the top of the cabinet. There must also be at least 100 mm (4") distance between the top of the cabinet and any overhanging kitchen furniture (A). Ideally, the appliance should not be positioned beneath overhanging furniture (B).

There should also be a gap of 25 mm either side of the appliance. Do not obstruct the space underneath. The back of the cabinet may be placed close to the wall but must not touch it. DO NOT install in places with restricted ventilation.

Adjust the level of the appliance by screwing out the adjustable foot, or feet, at the bottom of the cabinet using your fingers or a spanner (see figure).

## Rear spacers

The plastic bag containing all relevant documentation also contains two spacers to be fitted into special holes in the back of the appliance.

Fit the spacers into the holes, taking care to ensure that the arrow (A) is positioned as shown in the diagram. Then turn them through 45° (arrow (A) vertical) until they lock into place.

## Important

It must be possible to disconnect the appliance from the mains power supply; the plug must therefore be easily accessible after installation.

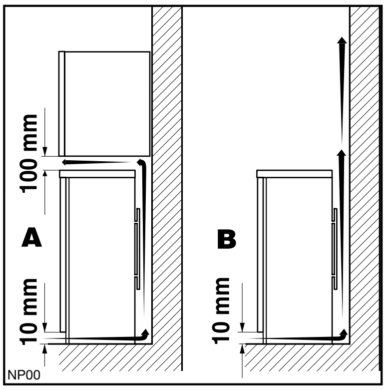


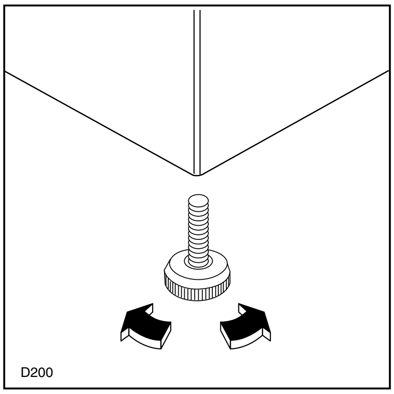


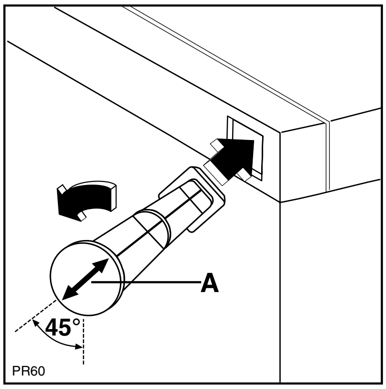

## ⚠ Electrical connections

Any electrical work required to install this appliance should be carried out by a qualified electrician or competent person.

**WARNING: THIS APPLIANCE MUST BE EARTHED.**

**The manufacturer declines any liability should this safety measure not be observed.**

If the plug that is fitted to your appliance is not suitable for your socket outlet, it must be cut off and the appropriate plug fitted.

Remove the fuse from the cut off plug.

The cut off plug should then be disposed of to prevent the hazard of shocks in case it should be plugged into a 13amp socket in another part of your home.

### ⚠ Important

The wires in the mains lead are coloured in accordance with the following code:

**Green and Yellow - Earth**

**Blue - Neutral**

**Brown - Live**

If you fit your own plug, the colours of the wires in the mains lead of your appliance may not correspond with the markings identifying the terminals in your plug, proceed as follows:

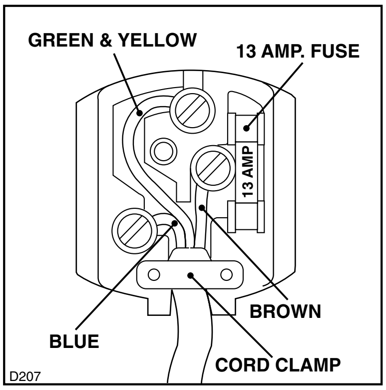


Connect the Green and Yellow (earth) wire to the terminal in the plug which is marked with the letter «E» or the earth symbol ⏚ or coloured green and yellow.

Connect the blue (neutral) wire to the terminal in the plug which is marked with the letter «N» or coloured black.

Connect the brown (live) wire to the terminal in the plug which is marked with the letter «L» or coloured red.

The plug moulded onto the lead incorporates a fuse.

For replacement, use a 13amp BSI362 fuse. Only ASTA or BSI approved fuses should be used.

The plug must not be used if the fuse cover/carrier is lost. The cover/carrier is indicated by the coloured insert at the base of the plug.

A replacement cover/carrier must be obtained from your local Electrolux Service Force Centre .

**This appliance complies with the E.E.C. Directive No. 87/308 of 2.6.87 relative to radio interference suppression.**

CE This appliance complies with the following E.E.C. Directives:

- **73/23 EEC of 19.2.73** (Low Voltage Directive) and subsequent modifications;
- **89/336 EEC of 3.5.89** (Electromagnetic Compatibility Directive) and subsequent modifications.

**Please ensure that when the appliance is installed it is easily accessible for the engineer in the event of a breakdown.**

## Door reversal directions

1. Disconnect from the electricity supply.
2. Remove all loose items, including food, store food in a cool place.
3. Gently lay the fridge/freezer on its back with the top held away from the floor by 5-8 cm (2-3 inches) of packing;
4. Remove the feet (3)
5. Remove bottom hinge (1).
6. Slide out the door from pin (G), unscrew the latter and then screw it down into the hinge provided on the opposite side, after having removed the small plugs which should then be fitted on the opposite side.
7. Refit the door and bottom hinge (1) on the opposite side.
8. Refit the feet (3) on the opposite side.
9. Unscrew the handle. Refit it on the opposite side after having pierced the plugs with a punch. Cover the holes left open with the plugs contained in the documentation pack.

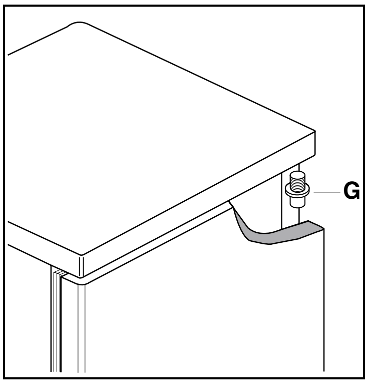


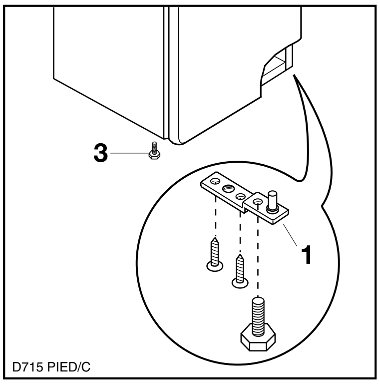


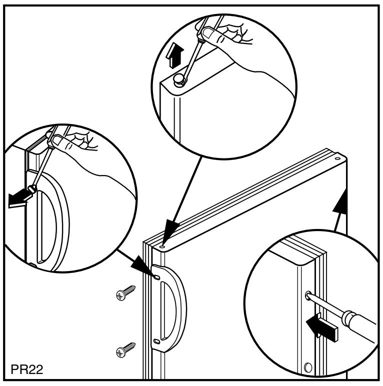


### Attention

After completion of the door reversiing operation, check that the door gasket adheres to the cabinet. If the ambient temperature is cold (i.e. in Winter), the gasket may not fit perfectly to the cabinet. In that case, wait for the natural fitting of the gasket or accelerate this process by heating up the part involved with a normal hairdryer.

Electrolux

© Electrolux plc 2003

***The Electrolux Group.*** *The world's No.1 choice.*

*The Electrolux Group is the world's largest producer of powered appliances for kitchen, cleaning and outdoor use. More than 55 million Electrolux Group products (such as refrigerators, cookers, washing machines, vacuum cleaners, chain saws and lawn mowers) are sold each year to a value of approx. USD 14 billion in more than 150 countries around the world.*